TOYOTA
LAND CRUISER PRADO

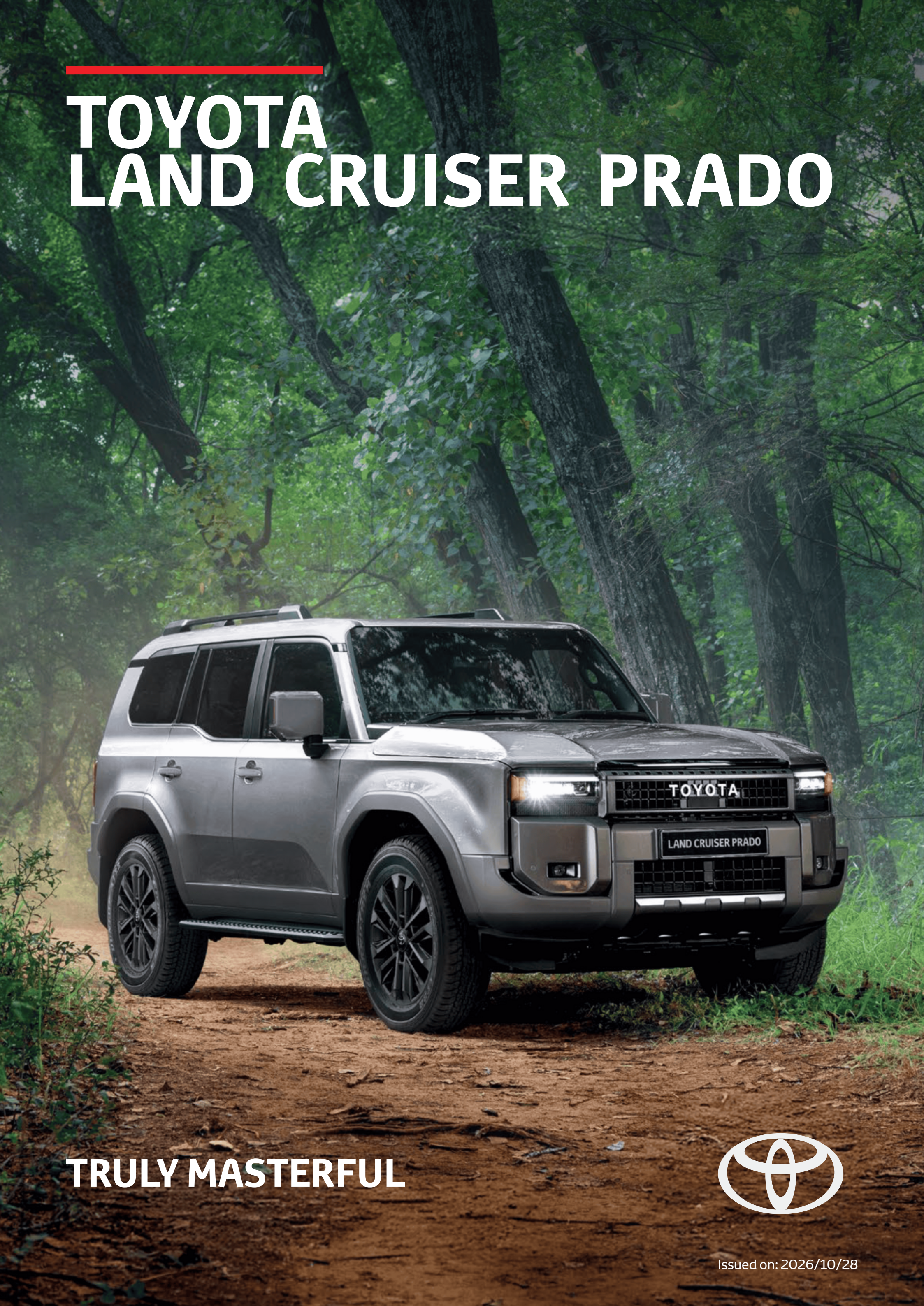

TRULY MASTERFUL

Issued on: 2026/10/28

SPECIFICATIONS

	Prado 2.8GD TX	Prado 2.8GD VX-R	Prado 2.8GD VX-L
Engine and Drivetrain			
Bore x Stroke (mm)	92.0x103.6	92.0x103.6	92.0x103.6
Differential Lock		Rear Centre with LSD	Rear Torsen LSD
Fuel System	Diesel Common Rail	Diesel Common Rail	Diesel Common Rail
Maximum Power (kW @ r/min)	150 @ 3000-3400	150 @ 3000-3400	150 @ 3000-3400
Maximum Torque (Nm @ r/min)	500 @ 1600-2800	500 @ 1600-2800	500 @ 1600-2800
Number of Cylinders and Arrangement	Inline-4	Inline-4	Inline-4
Tool Set	Basic	Basic	Basic + Spanner
Turbo Charger	•	•	•
Engine capacity (litre)	2.8	2.8	2.8
Adaptive Variable Suspension (AVS)			•
Fuel Consumption (Combined Cycle) (l/100km)	7.9	7.9	7.9
C02 Emission (g/km)	209	209	209
Transmission			
Transmission	Automatic-8-speed	Automatic-8-speed	Automatic-8-speed
Driven Wheels	4WD Part-Time	4WD Part-Time	4WD Part-Time
Starting System	Push Start	Push Start	Push Start
Paddle Shift			•
Suspension			
Front	Double Wishbone	Double Wishbone	Double Wishbone
Rear	Multilink	Multilink	Multilink
Adaptive Variable Suspension (AVS)			•
Wheels and Tyres			
Spare Wheel	Full 265-65R18 Aluminium	Full 265-65R18 Aluminium	Full 265-60R20 Aluminium
Tyre Size	F:265-65R18 Aluminium- R:265-65R18 Aluminium	F:265-65R18 Aluminium- R:265-65R18 Aluminium	F:265-60R20 Aluminium- R:265-60R20 Aluminium
Spare Wheel Carrier	Under Body	Under Body	Under Body
Body and Styling			
Daytime Running Light	Standard LED	Standard LED	Standard LED
Door Outside Handles	Colour - Coded	Colour - Coded	Colour - Coded
Front Bumper	Material + Painted	Material + Painted	Material + Painted
Front Fog Lamps	Standard LED	Standard LED	Standard LED
Headlights	LED	LED - Adaptive High-beam System (AHS)	LED - Adaptive High-beam System (AHS)
Headlamp Levelling	Standard Dynamic	Standard Dynamic	Standard Dynamic
Light Control System	•	•	•
Luggage Boot / Rear Door	Standard Power + Hatch	Standard Power + Hatch	Standard Power + Hatch
Model Name Mark	Land Cruiser Prado	Land Cruiser Prado	Land Cruiser Prado

Issued on: 2026/10/28

SPECIFICATIONS

	Prado 2.8GD TX	Prado 2.8GD VX-R	Prado 2.8GD VX-L
Body and Styling			
Side mirrors	Colour Coded, Auto-Retractable, Blind Spot Monitor (BSM)	Colour Coded, Power, Auto-Retractable, Memory, With Indicator, Blind Spot Monitor (BSM), Heated, Camera, Remote	Colour Coded, Power, Auto-Retractable, Memory, With Indicator, Blind Spot Monitor (BSM), Heated, Camera, Remote
Front Grille	Black, Toyota	Black, Toyota	Black, Toyota
Rear Bumper	Black	Black	Black
Rear Lights	LED	LED	LED
Rear Fog Lamp	Standard LED	Standard LED	Standard LED
Tow Hook	Standard 3	Standard 3	Standard 3
Front side Glass	UV cut, Green	UV cut, Green	UV cut, Green
Front Window Wiper	Auto, Rainsensing	Auto, Rainsensing	Auto, Rainsensing, Time adjustable
Rear Window Wiper	Intermittent	Intermittent	Intermittent
Headlamps Cleaner			•
Rear Spoiler	•	•	•
Side Step	•	•	Standard Illumination
Roof Rails	•	•	•
Interior, Comfort and Convenience			
AT Shift Lock	•	•	•
Cupholders	Standard 12	Standard 12	Standard 12
Door Inside Handles	Plating	Plating	Plating
Door Trim	Leather	Leather	Leather
Floor Carpet Trim	Carpet	Carpet	Carpet
Front Headrest	Adjustable - 2	Adjustable - 2	Adjustable - 2
Rear View Mirror	Electrochromatic (EC)	Digital	Digital
Key Reminder Warning	•	•	•
Meter Illumination Control	•	•	•
2nd Row Seats	60:40	60:40	60:40
Room Lamp	•	•	•
Seat Trim	Full Leather	Full Leather	Full Leather
Shift Lever & Knob	Leather	Leather	Leather, Chrome
Speedometer	Digital	Digital	Digital
Steering Wheel	4 Spoke Leather	4 Spoke Leather + Heated	4 Spoke Leather + Heated
3rd Row Seats	Fold-Down-Manual	Fold-Down-Power	Fold-Down-Power
Fridge		•	•
Cruise Control	Standard Adaptive, All Speed	Standard Adaptive, All Speed	Standard Adaptive, All Speed

Issued on: 2026/10/28

SPECIFICATIONS

	Prado 2.8GD TX	Prado 2.8GD VX-R	Prado 2.8GD VX-L
Interior, Comfort and Convenience			
Airconditioner	Auto Dual zone	Auto Dual zone	Auto Dual zone
Audio System	Toyota Display Audio, DAB, 8-inch	Toyota DAB, 12.3-inch	JBL DAB, 12.3-inch
Reverse Camera	Display Audio/ With guidelines, Washer	Display Audio/ With guidelines, Multi Terrain Monitor, Washer	Display Audio/ With guidelines, Multi Terrain Monitor, Washer
Bluetooth	•	•	•
Front Seat Adjustment	Driver Power & Passenger Manual	Driver & Passenger Power/ Driver Memory	Driver & Passenger Power/ Driver Memory
Heads Up Display (HUD)		•	•
Illuminated Entry	•	•	•
Multi-Information Display	Standard 7-inch	Standard 12.3-inch	Standard 12.3-inch
Power Socket	Rear - 12V / Boot - 12V	Rear - 12V / Boot - 12V	Rear - 12V / Boot - 12V
Power Steering	Electric / (EPS)	Electric / (EPS)	Electric / (EPS)
Electric Windows	All	All	All
Seat Heater	Standard Driver and Passenger only	Standard Front and Rear	Standard Front and Rear
Seat Lumbar Support	Driver 2-way	Driver 2-way	Driver 2-way
Seat Ventilation	Standard Driver + Passenger	Standard Front and Rear	Standard Front and Rear
Speakers	Standard 6	Standard 10	Standard 14
Steering Column Adjustments	Manual Tilt & Telescopic	Power Tilt & Telescopic	Power Tilt & Telescopic
Steering Switches	Standard Audio, Telephone, Cruise Control, Info Display, Voice Command	Standard Audio, Telephone, Cruise Control, Info Display, Voice Command	Standard Audio, Telephone, Cruise Control, Info Display, Voice Command
Sun Visor	Standard Mirror with Cover, Ticket Holder Driver + Passenger	Standard Mirror with Cover, Ticket Holder Driver + Passenger	Standard Mirror with Cover, Ticket Holder Driver + Passenger
USB	Standard 7	Standard 7	
Door Courtesy Lamp	•	•	•
Wireless Charger		Standard Front x1	Standard Front x1
Toyota Connect Enabled	•	•	•
USB Type	Type C 7PCs	Type C 7PCs	Type C 7PCs
Android Auto & Apple Carplay Connection	Standard Cable Android Auto, Cable Apple CarPlay	Standard Cable Android Auto, Wireless Apple CarPlay	Standard Cable Android Auto, Wireless Apple CarPlay
Safety and Security			
Height Adjustable Seat Belt	•	•	•
Airbag On-Off Switch	•	•	•
Anti-Theft System	Siren Alarm / Immobiliser / Intrusion Sensor / Tilt Sensor / Double lock / Ultra-Wide Band	Siren Alarm / Immobiliser / Intrusion Sensor / Tilt Sensor / Double lock / Ultra-Wide Band	Siren Alarm / Immobiliser / Intrusion Sensor / Tilt Sensor / Double lock / Ultra-Wide Band
Auto Door Lock	Standard Speed Dependent	Standard Speed Dependent	Standard Speed Dependent
Centre Rear Seatbelt	Standard 3-Point	Standard 3-Point	Standard 3-Point
Child Lock	Standard Rear door	Standard Rear door	Standard Rear door
Child Restraint System (ISOFIX)	Standard 2	Standard 2	Standard 2

Issued on: 2026/10/28

SPECIFICATIONS

	Prado 2.8GD TX	Prado 2.8GD VX-R	Prado 2.8GD VX-L
Safety and Security			
Emergency Brake Signal	•	•	•
Parking Brake	Electric	Electric	Electric
Front Brake	Ventilated Disc	Ventilated Disc	Ventilated Disc
Front Seat Belts	ELR, Pretensioner, Force Limiter	ELR, Pretensioner, Force Limiter	ELR, Pretensioner, Force Limiter
Occupant Detection	Front and Rear sensor	Front and Rear sensor	Front and Rear sensor
Power Door Lock	Standard, Double Lock	Standard, Double Lock	Standard, Double Lock
Pre-Crash System (Brake Synchronised)	•	•	•
Rear Brake	Ventilated Disc	Ventilated Disc	Ventilated Disc
Rear Seat Belts	Standard ELR	Standard ELR	Standard ELR
Seat Belt Warning	Front + Rear	Front + Rear	Front + Rear
Wireless Door Lock	Standard Smart Entry	Standard Smart Entry	Standard Smart Entry
Airbags	Curtain, Driver, Passenger, Driver Knee, Front Side, Passenger Knee, Front Centre	Driver, Passenger, Driver Knee, Front Side, Passenger Knee, Front Centre	Curtain, Driver, Passenger, Driver Knee, Front Side, Passenger Knee, Front Centre
Toyota Safety Sense	•	•	•
Driver Support Systems			
Tyre Pressure Monitor	•	•	•
Park Distance Control	Standard Front + Rear, Intelligent Clearance Sonar	Standard Front + Rear, Intelligent Clearance Sonar	Standard Front + Rear, Intelligent Clearance Sonar
Anti-Lock Braking System (ABS)	•	•	•
Blind Spot Monitor (BSM)	Standard Safe Exit Assist	Standard Safe Exit Assist	Standard Safe Exit Assist
Brake Assist (BA)	•	•	•
Multi-Terrain Select (MTS)	•	•	•
Traction Control (TRC)	Standard, , Active Traction Control (ATRC)	Standard, , Active Traction Control (ATRC)	Standard, , Active Traction Control (ATRC)
Vehicle Stability Control (VSC)	•	•	•
Drive Mode Select	Standard Eco / Normal / Sport	Standard Eco / Normal / Sport	Standard Eco / Normal / Sport / Sport S+ / Comfort / Custom
Trailer Sway Control (TSC)	•	•	•
Downhill Assist Control (DAC)	•	•	•
Lane Keeping System	Standard Lane Trace Assist	Standard Lane Trace Assist	Standard Lane Trace Assist+Touch
Crawl Control	•	•	•
Service and Warranty			
Service Plan	9 Services / 90, 000km	9 Services / 90, 000km	9 Services / 90, 000km
Service Interval	12 months / 10, 000km	12 months / 10, 000km	12 months / 10, 000km
Warranty	3 years / 100, 000km	3 years / 100, 000km	3 years / 100, 000km
Dimensions and Capacities			
Approach Angle (°)	31.0	31.0	32.0
Departure Angle (°)	17.0	17.0	17.0

Issued on: 2026/10/28

SPECIFICATIONS

	Prado 2.8GD TX	Prado 2.8GD VX-R	Prado 2.8GD VX-L
Dimensions and Capacities			
Front Overhang (mm)	935	935	935
Front Tread (mm)	1664	1664	1664
Fuel Tank Size (L)	80	80	80
Gross Combination Mass (GCM)	6550	6600	6600
Ground Clearance (mm)	205	205	215
Gross Vehicle Mass (GVM)	3050	3100	3100
Height (mm)	1925	1925	1935
Kerb Weight (kg)	2310-2460	2315-2520	2385-2510
Length (mm)	4925	4925	4925
Rear Overhang (mm)	1140	1140	1140
Rear Tread (mm)	1668	1668	1668
Secondary Fuel Tank (L)	30	30	30
Towing Capacity - Unbraked (kg)	750	750	750
Towing Capacity - Braked (kg)	3500	3500	3500
Turning circle (tyres, m)	6.0	6.0	6.0
Wheelbase (mm)	2850	2850	2850
Width (mm)	1980	1980	1980
Top Speed (km/h)	165	165	165

Issued on: 2026/10/28

SPECIFICATIONS

LINE DRAWING

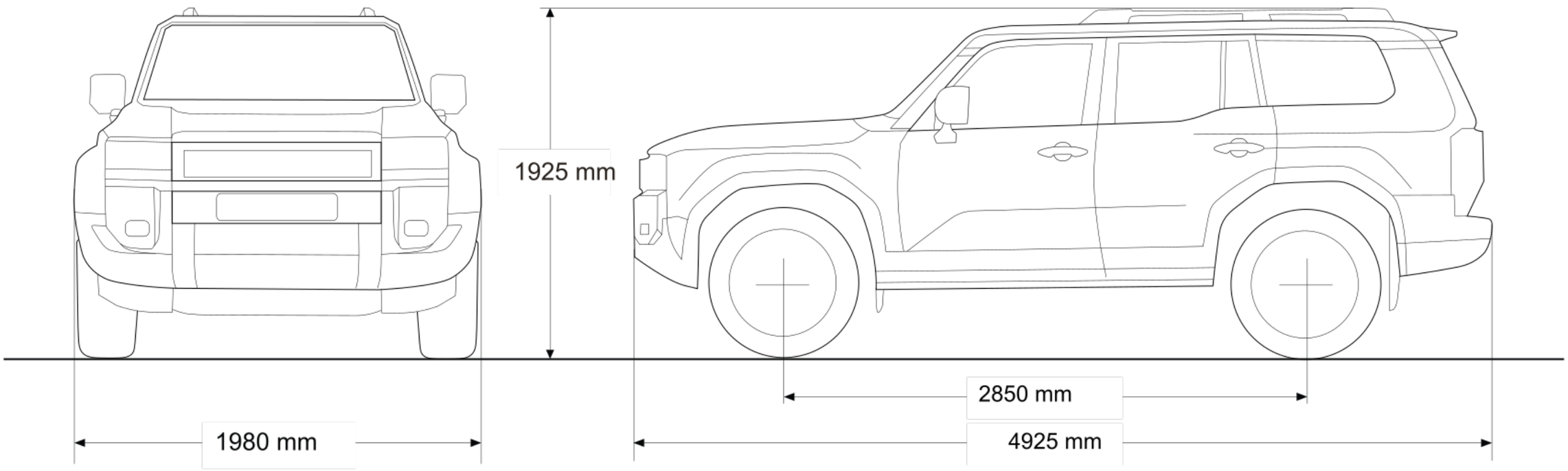

SPECIFICATIONS

EXTERIOR COLOURS

FOR ILLUSTRATIVE PURPOSES ONLY.

MONOTONE

***RAVEN BLACK & ATTITUDE BLACK COLOURS ARE FOR CUSTOMER ORDER ONLY.**

040 - Glacier White

4V8 - Avant-Garde Bronze Metallic

1L7 - Smokey Grey

089 - Platinum White Pearl

229 - Magnitite Black

5C8 - Sand

Disclaimer:

The information contained within or made available on any Toyota platform or note including but not limited to, this website/brochure/specification sheet, is provided for information purposes only. While we make reasonable efforts to update the information on our platform/s, Toyota Motor Corporation of Japan, and Toyota South Africa Motors (Pty) Ltd makes no representations, warranties, or guarantees, whether express or implied, that the content is accurate, complete or up to date, and all information contained herein is subject to change without notice.

Vehicle specifications may vary depending on the model, trim level, and market. Colours depicted on print and web material may not match the actual vehicle colour. Fuel consumption figures are estimates based on standardised testing conditions and actual results may vary due to (but not limited to) driving style, vehicle loading, tyres, wind, traffic, and accessories. All dimensions, capacities, and performance figures are approximate. Some features/options may be optional or only available on certain models/trim levels. Images and illustrations are for illustrative purposes only and may not reflect the actual vehicle.

Your use of, or reliance on, any information or contents herein is entirely at your own risk. Toyota Motor Corporation of Japan and Toyota South Africa Motors (Pty) Ltd (including its owners, agents, consultants, employees, and any affiliated person(s)) are not responsible for any loss or damages related to your use of, reliance on, or understanding of any information or contents on this or any other Toyota platform. This includes, without limitation, any direct, indirect, special, incidental, consequential, or punitive damages in terms of any contract, delict (breach of a duty of care) or law.

Furthermore, Toyota Motor Corporation of Japan and Toyota South Africa Motors (Pty) Ltd do not guarantee the uninterrupted or error-free operation of any platform or the availability of content, and are not liable for any interruptions, errors, or damages caused by any technical issues or limitations of these platforms, including but not limited to, server downtime, software malfunctions, or internet connectivity issues.

Issued on: 2026/10/28

LAND CRUISER
PRADO
VXL
TOYOTA
LAND CRUISER PRADO