TOYOTA LAND CRUISER 79 DOUBLE CAB

STILL THE MASTER

Issued on: 2026/10/28

SPECIFICATIONS

	LC79 4.0 Petrol D/C MT	LC79 4.2 Diesel D/C MT	LC79 2.8 GD-6 D/C AT	LC79 2.8 GD-6 D/C MT
Engine and Drivetrain				
1st Gear Ratio	4.529	4.313	3.600	3.600
2nd Gear Ratio	2.464	2.330	2.090	2.090
3rd Gear Ratio	1.490	1.436	1.488	1.488
4th Gear Ratio	1.000	1.000	1.000	1.000
5th Gear Ratio	0.881	0.838	0.688	0.688
6th Gear Ratio			0.581	0.581
A/T Oil Temp Warning				•
Bore x Stroke (mm)	94.0x95.0	94.0x100.0	92.0 x 103.6	92.0 x 103.6
Catalytic Converter	Standard 9R11R x2		Without 7R13R13R	Without 7R13R13R
Clutch Accumulator	•	•	•	
Compression Ratio	10.0:1	22.4:1	15.6 : 1	15.6 : 1
Differential Gear Ratio	4.100	4.100	4.100	4.300
Differential Lock	Front and Rear	Front and Rear	Front and Rear	Front and Rear
Displacement (cm³)	3956	4164	2755	2755
Emission Control	Euro 2	Euro 2	Euro 2	Euro 2
Engine Code	1GR-FE	1HZ	1GD-FTV	1GD-FTV
Engine Coolant	LLC 50%	LLC 50%	LLC 50%	LLC 50%
Engine Monitor Warning	•		•	•
Engine Oil Cooler	•	•	•	•
Engine Oil Level Warning			•	•
Engine capacity (litre)	4.0	4.2	2.8	2.8
Free Wheel Hub	•	•	•	•
Fuel Filter	•	•	•	•
Fuel Heater		•	•	•
Fuel Sedimenter (lamp)		•	•	•
Fuel System	Petrol EFI	Diesel	Diesel Common Rail	Diesel Common Rail
Maximum Power (kW @ r/min)	170 @ 5200	96 @ 3800	150 @ 3000-3400	150 @ 3000-3400
Maximum Torque (Nm @ r/min)	360 @ 3800	285 @ 2200	500 @ 1600-2800	500 @ 1600-2800
Number of Cylinders and Arrangement	V-Type-6	Inline-6	Inline-4	Inline-4
Radiator	514.4X560X48 FP=4.0	514.4X560X48 FP=3.5	583.3X620X34 FP=3.0	583.3X620X34 FP=3.0
Reverse Gear ratio	4.313	4.220	3.732	3.732

SPECIFICATIONS

	LC79 4.0 Petrol D/C MT	LC79 4.2 Diesel D/C MT	LC79 2.8 GD-6 D/C AT	LC79 2.8 GD-6 D/C MT
Engine and Drivetrain				
Stabilizer	Front Only	Front Only	Front Only	Front Only
Timing Belt Warning		•		
Tool Set	Basic	Basic	Basic	Basic
Transfer Case	•	•	•	•
Valve Mechanism	24, DOHC, VVT-I	12, SOHC	16, DOHC	16, DOHC
Transmission Oil Cooler				•
Turbo Charger			•	•
Fuel Consumption (Combined Cycle) (l/100km)	14.4	12.2	9.7	9.7
C02 Emission (g/km)	343	320	254	254
Transmission				
Transmission	Manual-5-speed	Manual-5-speed	Automatic-6-speed	Manual-5-speed
Driven Wheels	4WD	4WD	4WD	4WD
Paddle Shift				•
Suspension				
Front	Rigid Axle (Coil)	Rigid Axle (Coil)	Rigid Axle (Coil)	Rigid Axle (Coil)
Rear	Rigid-Axle-(Leaf)	Rigid-Axle-(Leaf)	Rigid-Axle-(Leaf)	Rigid-Axle-(Leaf)
Wheels and Tyres				
Spare Wheel	Full 265-70R16Alloy	Full 265-70R16Alloy	Full 265-70R16Alloy	Full 265-70R16Alloy
Tyre Size	F:265-70R16Alloy R:265-70R16Alloy	F:265-70R16Alloy R:265-70R16Alloy	F:265-70R16Alloy R:265-70R16Alloy	F:265-70R16Alloy R:265-70R16Alloy
Spare Wheel Carrier	Load Box	Load Box	Load Box	Load Box
Body and Styling				
Antenna	•	•	•	•
Body Colour	Monotone	Monotone	Monotone	Monotone
Engine Under Cover & Protector	•	•	•	•
Front Bumper	Black	Black	Black	Black
Front Fog Lamps	Standard LED	Standard LED	Standard LED	Standard LED
Front Grille	Material	Material	Material	Material
Front Window Wiper	Intermittent	Intermittent	Intermittent	Intermittent
Headlights	Halogen	Halogen	Halogen	Halogen
Loadbox	•	•	•	•
Over-Fenders	•	•	•	•
Side mirrors	Black	Black	Black	Black
Tow Hook	Standard 2	Standard 2	Standard 2	Standard 2
Windshield Glass	Laminated, Green, Shade Band	Laminated, Green, Shade Band	Laminated, Green	Laminated, Green
Side Step	Standard Aluminium	Standard Aluminium	Standard Aluminium	Standard Aluminium

Issued on: 2026/10/28

SPECIFICATIONS

	LC79 4.0 Petrol D/C MT	LC79 4.2 Diesel D/C MT	LC79 2.8 GD-6 D/C AT	LC79 2.8 GD-6 D/C MT
Interior, Comfort and Convenience				
4WD Selector	Standard Lever	Standard Lever	Standard Lever	Standard Lever
Assist Grip	Standard 7	Standard 7	Standard 7	Standard 7
Centre Console	Standard Rear	Standard Rear	Standard Front, Rear	Standard Front, Rear
Clock	Standard Digital	Standard Digital	Standard Digital	Standard Digital
Cupholders	•	•	•	•
Door Pockets			Standard Front	Standard Front
Floor Carpet Trim	PVC	PVC	PVC	PVC
Front Headrest	Adjustable - 2	Adjustable - 2	Adjustable - 2	Adjustable - 2
Glove Box	Lockable	Lockable	Lockable	Lockable
Rear Headrests	Adjustable 2	Adjustable 2	Adjustable 2	Adjustable 2
Rear View Mirror	Day & Night	Day & Night	Day & Night	Day & Night
Room Lamp	•	•	•	•
Seat Back Pockets	Standard Driver and Passenger	Standard Driver and Passenger	Standard Driver and Passenger	Standard Driver and Passenger
Seat Trim	Fabric	Fabric	Fabric	Fabric
Shift Lever & Knob	Urethane	Urethane	Urethane	Urethane
Shift Position Indicator				•
Speedometer	Analog	Analog	Analog	Analog
Steering Wheel	4 Spoke Urethane	4 Spoke Urethane	4 Spoke Leather+Wood	4 Spoke Leather+Wood
Water Temperature Meter	•	•	•	•
Airconditioner	Manual	Manual	Manual	Manual
Audio System	Toyota Display Audio	Toyota Display Audio	Toyota Display Audio	Toyota Display Audio
Bluetooth	•	•	•	•
Door Ajar Warning	•	•	•	•
Electric Windows	All One Touch Driver only	All One Touch Driver only	All One Touch Driver only	All One Touch Driver only
Footrest	•	•	•	•
Front Seat Adjustment	Manual	Manual	Manual	Manual
Heater	Manual	Manual	Manual	Manual
Navigation System	•	•	•	
Power Socket	Front - 12V	Front - 12V	Front - 12V	Front - 12V
Power Steering	Hydraulic	Hydraulic	Hydraulic	Hydraulic
Speakers	Standard 2	Standard 2	Standard 2	Standard 2

Issued on: 2026/10/28

SPECIFICATIONS

	LC79 4.0 Petrol D/C MT	LC79 4.2 Diesel D/C MT	LC79 2.8 GD-6 D/C AT	LC79 2.8 GD-6 D/C MT
Interior, Comfort and Convenience				
Steering Column Adjustments	Manual Tilt & Telescopic, Collapsible	Manual Tilt & Telescopic, Collapsible	Manual Tilt & Telescopic, Collapsible	Manual Tilt & Telescopic, Collapsible
Sun Visor	•	•	•	•
Toyota Connect Enabled	•	•	•	•
USB	•	•	•	Standard 1
Android Auto & Apple Carplay Connection				Standard Wireless Android Auto, Wireless Apple CarPlay
Safety and Security				
Anti-Theft System	Siren Alarm + Immobiliser	Siren Alarm + Immobiliser	Siren Alarm + Immobiliser	Siren Alarm + Immobiliser
Centre Rear Seatbelt	Standard Lap	Standard Lap	Standard Lap	Standard Lap
Child Lock	•	•	•	•
Front Airbag(s)	Standard Driver + Passenger	Standard Driver + Passenger	Standard Driver + Passenger	Standard Driver + Passenger
Front Brake	Ventilated Disc	Ventilated Disc	Ventilated Disc	Ventilated Disc
Front Seat Belts	ELR	ELR	ELR	ELR
Power Door Lock	Standard	Standard	Standard	Standard
Rear Brake	Drum	Drum	Drum	Drum
Rear Seat Belts	Standard ELR	Standard ELR	Standard ELR	Standard ELR
Spare Wheel Anti-Theft Lock	•	•	•	•
Wireless Door Lock	Standard Remote	Standard Remote	Standard Remote	Standard Remote
Driver Support Systems				
Anti-Lock Braking System (ABS)	•	•	•	•
Downhill Assist Control (DAC)				•
Electronic Brake Force Distribution (EBD)				•
Hill Assist Control (HAC)			•	•
Vehicle Stability Control (VSC)		•	•	•
Traction Control (TRC)		Without,	Standard, , Active Traction Control (ATRC)	Standard, , Active Traction Control (ATRC)
Service and Warranty				
Service Interval	12 months / 10, 000km	12 months / 5, 000km	12 months / 10, 000km	12 months / 10, 000km
Service Plan	9 Services / 90, 000km	18 Services / 90000 km	9 Services / 90, 000km	9 Services / 90, 000km
Warranty	3 years / 100, 000km	3 years / 100, 000km	3 years / 100, 000km	3 years / 100, 000km
Dimensions and Capacities				
Approach Angle (°)	33.0	33.0	33.0	33.0
Departure Angle (°)	27.0	27.0	27.0	27.0
Front Overhang (mm)	850	850	850	850
Front Tread (mm)	1555	1555	1555	1555
Fuel Tank Size (L)	130	130	130	130
Gross Combination Mass (GCM)	4700	4700	6800	6800

Issued on: 2026/10/28

SPECIFICATIONS

	LC79 4.0 Petrol D/C MT	LC79 4.2 Diesel D/C MT	LC79 2.8 GD-6 D/C AT	LC79 2.8 GD-6 D/C MT
Dimensions and Capacities				
Gross Vehicle Mass (GVM)	3200	3200	3300	3300
Ground Clearance (mm)	235	235	235	235
Height (mm)	1945	1945	1945	1945
Interior Height (mm)	1225	1225	1225	1225
Interior Length (mm)	1660	1660	1660	1660
Interior Width (mm)	1515	1515	1515	1515
Kerb Weight (kg)	2165	2245	2250-2490	2250-2490
Length (mm)	5235	5235	5235	5235
Rear Overhang (mm)	1205	1205	1205	1205
Rear Tread (mm)	1460	1460	1460	1460
Towing Capacity - Braked (kg)	1500	1500	3500	3500
Towing Capacity - Unbraked (kg)	750	750	750	750
Turning circle (tyres, m)	7.2	7.2	7.2	7.2
Washer Tank (l)	3.0	3.0	3.0	3.0
Wheelbase (mm)	3180	3180	3180	3180
Width (mm)	1870	1870	1870	1870
Top Speed (km/h)	165	140	150	150

Issued on: 2026/10/28

SPECIFICATIONS

LINE DRAWING

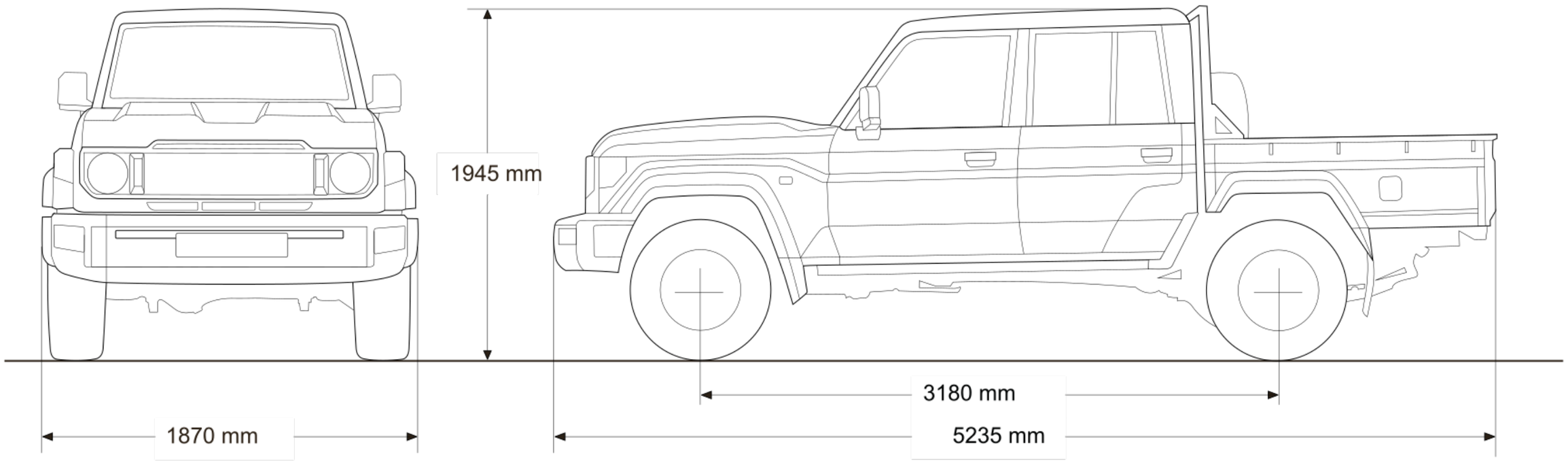

SPECIFICATIONS

EXTERIOR COLOURS

FOR ILLUSTRATIVE PURPOSES ONLY.

MONOTONE

058 - Ivory White

1F7 - Satin Silver Metallic

1G3 - Graphite Grey Metallic

3Q3 - Ruby Metallic

4E9 - Sand Beige

8H6 - Dark Blue

Disclaimer:

The information contained within or made available on any Toyota platform or note including but not limited to, this website/brochure/specification sheet, is provided for information purposes only. While we make reasonable efforts to update the information on our platform/s, Toyota Motor Corporation of Japan, and Toyota South Africa Motors (Pty) Ltd makes no representations, warranties, or guarantees, whether express or implied, that the content is accurate, complete or up to date, and all information contained herein is subject to change without notice.

Vehicle specifications may vary depending on the model, trim level, and market. Colours depicted on print and web material may not match the actual vehicle colour. Fuel consumption figures are estimates based on standardised testing conditions and actual results may vary due to (but not limited to) driving style, vehicle loading, tyres, wind, traffic, and accessories. All dimensions, capacities, and performance figures are approximate. Some features/options may be optional or only available on certain models/trim levels. Images and illustrations are for illustrative purposes only and may not reflect the actual vehicle.

Your use of, or reliance on, any information or contents herein is entirely at your own risk. Toyota Motor Corporation of Japan and Toyota South Africa Motors (Pty) Ltd (including its owners, agents, consultants, employees, and any affiliated person(s)) are not responsible for any loss or damages related to your use of, reliance on, or understanding of any information or contents on this or any other Toyota platform. This includes, without limitation, any direct, indirect, special, incidental, consequential, or punitive damages in terms of any contract, delict (breach of a duty of care) or law.

Furthermore, Toyota Motor Corporation of Japan and Toyota South Africa Motors (Pty) Ltd do not guarantee the uninterrupted or error-free operation of any platform or the availability of content, and are not liable for any interruptions, errors, or damages caused by any technical issues or limitations of these platforms, including but not limited to, server downtime, software malfunctions, or internet connectivity issues.

Issued on: 2026/10/28

TOYOTA
4WD
LAND CRUISER 79