TOYOTA FORTUNER

REIMAGINE THE LUXURY OF FREEDOM

Issued on: 2026/10/28

SPECIFICATIONS

	2.4 GD-6 RB 6MT	2.4 GD-6 RB 6AT	2.4 GD-6 4X4 6AT	2.8 GD-6 RB 6AT	2.8 GD-6 RB 6AT 48V	2.8 GD-6 4X4 6AT
Engine and Drivetrain						
Bore x Stroke (mm)	92.0 x 90.0	92.0 x 90.0	92.0 x 90.0	92.0 x 103.6	92.0 x 103.6	92.0 x 103.6
Differential Lock	•	•	•	•	•	•
Displacement (cm³)	2393	2393	2393	2755	2755	2755
Fuel System	Diesel	Diesel	Diesel	Diesel	Diesel	Diesel
Maximum Power (kW @ r/min)	110 @ 3400	110 @ 3400	110 @ 3400	150 @ 3000	150 @ 3000	150 @ 3000
Maximum Torque (Nm @ r/min)	400 @ 1600-2000	400 @ 1600-2000	400 @ 1600-2000	500 @ 1600	500 @ 1600	500 @ 1600
Number of Cylinders and Arrangement	Inline-4	Inline-4	Inline-4	Inline-4	Inline-4	Inline-4
Engine capacity (litre)	2.4	2.4	2.4	2.8	2.8	2.8
Fuel Consumption (Combined Cycle) (l/100km)	6.8	7.2	7.6	7.6	7.6	7.9
C02 Emission (g/km)	179	190	201	201	200	209
Transmission						
Transmission	Manual-6-speed	Automatic-6-speed	Automatic-6-speed	Automatic-6-speed	Automatic-6-speed	Automatic-6-speed
Driven Wheels	RWD	RWD	4WD Part-Time	RWD	RWD	4WD Part-Time
Starting System	Push Start	Push Start	Push Start	Push Start	Push Start + Stop Start	Push Start
Paddle Shift				•	•	•
Suspension						
Front	Double Wishbone	Double Wishbone	Double Wishbone	Double Wishbone	Double Wishbone	Double Wishbone
Rear	Multilink---Four-Link	Multilink---Four-Link	Multilink---Four-Link	Multilink---Four-Link	Multilink---Four-Link	Multilink---Four-Link
Wheels and Tyres						
Spare Wheel	Full Alloy	Full Alloy	Full Alloy	Full Alloy	Full Alloy	Full Alloy
Tyre Size	F:265-60R18 Alloy-R:265-60R18 Alloy	F:265-60R18 Alloy-R:265-60R18 Alloy	F:265-60R18 Alloy-R:265-60R18 Alloy	F:265-60R18 Alloy-R:265-60R18 Alloy	F:265-60R18 Alloy-R:265-60R18 Alloy	F:265-60R18 Alloy-R:265-60R18 Alloy
Body and Styling						
Daytime Running Light	•	•	•	•	•	•
Door Outside Handles	Chrome - -	Chrome - -	Chrome - -	Chrome - -	Chrome - -	Chrome - -
Front Bumper	Colour Coded	Colour Coded	Colour Coded	Colour Coded	Colour Coded	Colour Coded
Front Fog Lamps	Standard LED	Standard LED	Standard LED	Standard LED	Standard LED	Standard LED
Headlights	LED	LED	LED	LED	LED	LED
Headlamp Levelling	Standard Automatic	Standard Automatic	Standard Automatic	Standard Automatic	Standard Automatic	Standard Automatic
Light Control System	Auto Light Control System, Guided Exit Lighting	Auto Light Control System, Guided Exit Lighting	Auto Light Control System, Guided Exit Lighting	Auto Light Control System, Guided Exit Lighting	Auto Light Control System, Guided Exit Lighting	Auto Light Control System, Guided Exit Lighting
Luggage Boot / Rear Door	Standard Manual	Standard Manual	Standard Manual	Standard Power	Standard Power	Standard Power
Side mirrors	Colour Coded,-Power, Retractable, With Indicator	Colour Coded,-Power, Retractable, With Indicator	Colour Coded,-Power, Retractable, With Indicator	Colour Coded,-Power, Retractable, With Indicator	Colour Coded,-Power, Retractable, With Indicator	Colour Coded,-Power, Retractable, With Indicator
Front Grille	Black	Black	Black	Black	Black	Black
Rear Bumper	Colour Coded	Colour Coded	Colour Coded	Colour Coded	Colour Coded	Colour Coded
Rear Lights	LED	LED	LED	LED	LED	LED
Rear Fog Lamp				•	•	•

	2.8 GD-6 4X4 6AT 48V	2.8 GD-6 RB VX 6AT	2.8 GD-6 RB VX 6AT 48V	2.8 GD-6 4x4 VX 6AT	2.8 GD-6 4x4 VX 6AT 48V	2.8 GD-6 4x4 GR-S 6AT
Engine and Drivetrain						
Bore x Stroke (mm)	92.0 x 103.6	92.0 x 103.6	92.0 x 103.6	92.0 x 103.6	92.0 x 103.6	92.0 x 103.6
Differential Lock	•	•	•	•	•	•
Displacement (cm³)	2755	2755	2755	2755	2755	2755
Fuel System	Diesel	Diesel	Diesel	Diesel	Diesel	Diesel
Maximum Power (kW @ r/min)	150 @ 3000	150 @ 3000	150 @ 3000	150 @ 3000	150 @ 3000	165 @ 3000
Maximum Torque (Nm @ r/min)	500 @ 1600	500 @ 1600	500 @ 1600	500 @ 1600	500 @ 1600	550 @ 1600
Number of Cylinders and Arrangement	Inline-4	Inline-4	Inline-4	Inline-4	Inline-4	Inline-4
Engine capacity (litre)	2.8	2.8	2.8	2.8	2.8	2.8
Fuel Consumption (Combined Cycle) (l/100km)	7.6	7.6	7.6	7.9	7.6	
C02 Emission (g/km)	200	201	200	209	200	
Transmission						
Transmission	Automatic-6-speed	Automatic-6-speed	Automatic-6-speed	Automatic-6-speed	Automatic-6-speed	Automatic-6-speed
Driven Wheels	4WD Part-Time	RWD	RWD	4WD Part-Time	4WD Part-Time	4WD Part-Time
Starting System	Push Start + Stop Start	Push Start	Push Start + Stop Start	Push Start	Push Start + Stop Start	GR-S Push Start
Paddle Shift	•	•	•	•	•	•
Suspension						
Front	Double Wishbone	Double Wishbone	Double Wishbone	Double Wishbone	Double Wishbone	Double Wishbone
Rear	Multilink---Four-Link	Multilink---Four-Link	Multilink---Four-Link	Multilink---Four-Link	Multilink---Four-Link	Multilink---Four-Link
Wheels and Tyres						
Spare Wheel	Full Alloy	Full Alloy	Full Alloy	Full Alloy	Full Alloy	Full Alloy GR-S
Tyre Size	F:265-60R18 Alloy-R:265-60R18 Alloy	F:265-60R18 Alloy-R:265-60R18 Alloy	F:265-60R18 Alloy-R:265-60R18 Alloy	F:265-60R18 Alloy-R:265-60R18 Alloy	F:265-60R18 Alloy-R:265-60R18 Alloy	F:265-60R18 Alloy GR-S R:265-60R18 Alloy GR-S
Body and Styling						
Daytime Running Light	•	•	•	•	•	•
Door Outside Handles	Chrome - -	Chrome - -	Chrome - -	Chrome - -	Chrome - -	Colour - Coded
Front Bumper	Colour Coded	Colour Coded	Colour Coded	Colour Coded	Colour Coded	GR-S Colour
Front Fog Lamps	Standard LED	Standard LED	Standard LED	Standard LED	Standard LED	Standard LED
Headlights	LED	LED	LED	LED	LED	LED
Headlamp Levelling	Standard Automatic	Standard Automatic	Standard Automatic	Standard Automatic	Standard Automatic	Standard Automatic
Light Control System	Auto Light Control System, Guided Exit Lighting	Auto Light Control System, Guided Exit Lighting	Auto Light Control System, Guided Exit Lighting	Auto Light Control System, Guided Exit Lighting	Auto Light Control System, Guided Exit Lighting	Auto Light Control System, Guided Exit Lighting
Luggage Boot / Rear Door	Standard Power	Standard Power	Standard Power	Standard Power	Standard Power	Standard Power
Side mirrors	Colour Coded,-Power, Retractable, With Indicator	Colour Coded,-Power, Retractable, With Indicator, Blind Spot Monitor (BSM), Welcome Lights	Colour Coded,-Power, Retractable, With Indicator, Blind Spot Monitor (BSM), Welcome Lights	Colour Coded,-Power, Retractable, With Indicator, Blind Spot Monitor (BSM), Welcome Lights	Colour Coded,-Power, Retractable, With Indicator, Blind Spot Monitor (BSM), Welcome Lights	Colour Coded,-Power, Retractable, With Indicator, Blind Spot Monitor (BSM), Welcome Lights
Front Grille	Black	Black	Black	Black	Black	GR-S Black
Rear Bumper	Colour Coded	Colour Coded	Colour Coded	Colour Coded	Colour Coded	GR-S Painted
Rear Lights	LED	LED	LED	LED	LED	LED
Rear Fog Lamp	•	•	•	•	•	•

Issued on: 2026/10/28

SPECIFICATIONS

	2.4 GD-6 RB 6MT	2.4 GD-6 RB 6AT	2.4 GD-6 4X4 6AT	2.8 GD-6 RB 6AT	2.8 GD-6 RB 6AT 48V	2.8 GD-6 4X4 6AT
Body and Styling						
Front side Glass	Green	Green	Green	Green	Infrared ray-cut	Green
Rear side Glass	Privacy	Privacy	Privacy	Privacy	Infrared ray-cut	Privacy
Rear quarter Glass	Privacy	Privacy	Privacy	Privacy	Infrared ray-cut	Privacy
Back Glass	Privacy	Privacy	Privacy	Privacy	Infrared ray-cut	Privacy
Front Window Wiper	Intermittent, Time adjustable	Intermittent, Time adjustable	Intermittent, Time adjustable	Intermittent, Time adjustable	Intermittent, Time adjustable	Intermittent, Time adjustable
Rear Window Wiper	Intermittent	Intermittent	Intermittent	Intermittent	Intermittent	Intermittent
Sequential Turn Signal				•	•	•
Front Spoiler	•	•	•	•	•	•
Rear Spoiler	•	•	•	•	•	•
Side Step	Standard Black	Standard Black	Standard Black	Standard Black	Standard Black	Standard Black
Roof Rails	•	•	•	•	•	•
Interior, Comfort and Convenience						
4WD Indicator			•			•
4WD Selector			Standard Switch			Standard Switch
Cupholders	•	•	•	•	•	•
Floor Carpet Trim	Carpet	Carpet	Carpet	Carpet	Carpet	Carpet
Front Headrest	Adjustable - 2	Adjustable - 2	Adjustable - 2	Adjustable - 2	Adjustable - 2	Adjustable - 2
Rear View Mirror	Day & Night	Day & Night	Day & Night	Electrochromatic (EC)	Electrochromatic (EC)	Electrochromatic (EC)
Key Reminder Warning	•	•	•	•	•	•
Meter Illumination Control	•	•	•	•	•	•
Overhead Console	Standard, Sunglass Holder	Standard, Sunglass Holder	Standard, Sunglass Holder	Standard, Sunglass Holder	Standard, Sunglass Holder	Standard, Sunglass Holder
2nd Row Seats	60:40	60:40	60:40	60:40	60:40	60:40
Seat Trim	Partial Leather	Partial Leather	Partial Leather	Partial Leather	Partial Leather	Partial Leather
Shift Lever & Knob	Urethane	Urethane	Urethane	Leather	Leather	Leather
Speedometer	Analog Tachometer	Analog Tachometer	Analog Tachometer	Analog Tachometer	Analog Tachometer	Analog Tachometer
Steering Wheel	4 Spoke Urethane	4 Spoke Urethane	4 Spoke Urethane	4 Spoke Leather+Wood	4 Spoke Leather+Wood	4 Spoke Leather+Wood
3rd Row Seats	Fold-Up	Fold-Up	Fold-Up	Fold-Up	Fold-Up	Fold-Up
Front Personal Lamp	•	•	•	•	•	•
Cruise Control	•	•	•	•	•	•
Airconditioner	Manual	Manual	Manual	Auto Dual zone	Auto Dual zone	Auto Dual zone
Audio System	Toyota Display Audio, DAB	Toyota Display Audio, DAB	Toyota Display Audio, DAB	Toyota Display Audio, DAB	Toyota Display Audio, DAB	Toyota Display Audio, DAB
Reverse Camera	Display Audio	Display Audio	Display Audio	Display Audio	Display Audio	Display Audio

	2.8 GD-6 4X4 6AT 48V	2.8 GD-6 RB VX 6AT	2.8 GD-6 RB VX 6AT 48V	2.8 GD-6 4x4 VX 6AT	2.8 GD-6 4x4 VX 6AT 48V	2.8 GD-6 4x4 GR-S 6AT
Body and Styling						
Front side Glass	Infrared ray-cut	Green	Infrared ray-cut	Green	Infrared ray-cut	Green
Rear side Glass	Infrared ray-cut	Privacy	Infrared ray-cut	Privacy	Infrared ray-cut	Privacy
Rear quarter Glass	Infrared ray-cut	Privacy	Infrared ray-cut	Privacy	Infrared ray-cut	Privacy
Back Glass	Infrared ray-cut	Privacy	Infrared ray-cut	Privacy	Infrared ray-cut	Privacy
Front Window Wiper	Intermittent, Time adjustable	Intermittent, Time adjustable	Intermittent, Time adjustable	Intermittent, Time adjustable	Intermittent, Time adjustable	Intermittent, Time adjustable
Rear Window Wiper	Intermittent	Intermittent	Intermittent	Intermittent	Intermittent	Intermittent
Sequential Turn Signal	•	•	•	•	•	•
Front Spoiler	•	•	•	•	•	•
Rear Spoiler	•	•	•	•	•	•
Side Step	Standard Black	Standard Black	Standard Black	Standard Black	Standard Black	Standard Black
Roof Rails	•	•	•	•	•	•
Interior, Comfort and Convenience						
4WD Indicator	•			•	•	•
4WD Selector	Standard Switch			Standard Switch	Standard Switch	Standard Switch
Cupholders	•	•	•	•	•	•
Floor Carpet Trim	Carpet	Carpet	Carpet	Carpet	Carpet	Carpet
Front Headrest	Adjustable - 2	Adjustable - 2	Adjustable - 2	Adjustable - 2	Adjustable - 2	Adjustable - 2
Rear View Mirror	Electrochromatic (EC)	Electrochromatic (EC)	Electrochromatic (EC)	Electrochromatic (EC)	Electrochromatic (EC)	Electrochromatic (EC)
Key Reminder Warning	•	•	•	•	•	•
Meter Illumination Control	•	•	•	•	•	•
Overhead Console	Standard, Sunglass Holder	Standard, Sunglass Holder	Standard, Sunglass Holder	Standard, Sunglass Holder	Standard, Sunglass Holder	Standard, Sunglass Holder
2nd Row Seats	60:40	60:40	60:40	60:40	60:40	60:40
Seat Trim	Partial Leather	Partial Leather	Partial Leather	Partial Leather	Partial Leather	Leather + Suede
Shift Lever & Knob	Leather	Leather	Leather	Leather	Leather	GR-S Leather
Speedometer	Analog Tachometer	Analog Tachometer	Analog Tachometer	Analog Tachometer	Analog Tachometer	Analog Tachometer
Steering Wheel	4 Spoke Leather+Wood	4 Spoke Leather+Wood	4 Spoke Leather+Wood	4 Spoke Leather+Wood	4 Spoke Leather+Wood	4 Spoke GR-S Leather
3rd Row Seats	Fold-Up	Fold-Up	Fold-Up	Fold-Up	Fold-Up	Fold-Up
Front Personal Lamp	•	•	•	•	•	•
Cruise Control	•	Standard Adaptive, High Speed	Standard Adaptive, High Speed	Standard Adaptive, High Speed	Standard Adaptive, High Speed	Standard Adaptive, High Speed
Airconditioner	Auto Dual zone	Auto Dual zone	Auto Dual zone	Auto Dual zone	Auto Dual zone	Auto Dual zone
Audio System	Toyota Display Audio, DAB	JBL Display Audio, DAB	JBL Display Audio, DAB	JBL Display Audio, DAB	JBL Display Audio, DAB	JBL Display Audio, DAB
Reverse Camera	Display Audio	Display Audio/ Panoramic View Monitor	Display Audio/ Panoramic View Monitor	Display Audio/ Panoramic View Monitor	Display Audio/ Panoramic View Monitor	Display Audio/ Panoramic View Monitor

Issued on: 2026/10/28

SPECIFICATIONS

	2.4 GD-6 RB 6MT	2.4 GD-6 RB 6AT	2.4 GD-6 4X4 6AT	2.8 GD-6 RB 6AT	2.8 GD-6 RB 6AT 48V	2.8 GD-6 4X4 6AT
Interior, Comfort and Convenience						
Bluetooth	•	•	•	•	•	•
Front Seat Adjustment	Driver & Passenger Manual	Driver & Passenger Manual	Driver & Passenger Manual	Driver & Passenger Power	Driver & Passenger Power	Driver & Passenger Power
Front Seat Reclining	Driver & Passenger Manual	Driver & Passenger Manual	Driver & Passenger Manual	Driver & Passenger Power	Driver & Passenger Power	Driver & Passenger Power
Front Seat Vertical Adjuster	Driver Manual	Driver Manual	Driver Manual	Driver + Passenger Power	Driver + Passenger Power	Driver + Passenger Power
Light Remind Warning	•	•	•	•	•	•
Heater	Manual	Manual	Manual	Auto Dual	Auto Dual	Auto Dual
Multi-Information Display	Standard TFT	Standard TFT	Standard TFT	Standard TFT	Standard TFT	Standard TFT
Power Socket	Front - 12V / Rear - 12V / Boot - 12V	Front - 12V / Rear - 12V / Boot - 12V	Front - 12V / Rear - 12V / Boot - 12V	Front - 12V / Boot - 12V / Rear - 220V / Rear USB charging x2	Front - 12V / Boot - 12V / Rear - 220V / Rear USB charging x2	Front - 12V / Boot - 12V / Rear - 220V / Rear USB charging x2
Power Steering	Hydraulic / Variable / Flow / Control	Hydraulic / Variable / Flow / Control	Hydraulic / Variable / Flow / Control	Hydraulic / Variable / Flow / Control	Hydraulic / Variable / Flow / Control	Hydraulic / Variable / Flow / Control
Electric Windows	All All One Touch	All All One Touch	All All One Touch	All All One Touch	All All One Touch	All All One Touch
Rear Airconditioner	Manual	Manual	Manual	Auto	Auto	Auto
Rear Armrest	Standard 2 Cupholders	Standard 2 Cupholders	Standard 2 Cupholders	Standard 2 Cupholders	Standard 2 Cupholders	Standard 2 Cupholders
Seat Heater						
Speakers	Standard 6	Standard 6	Standard 6	Standard 6	Standard 6	Standard 6
Steering Column Adjustments	Manual Tilt & Telescopic	Manual Tilt & Telescopic	Manual Tilt & Telescopic	Manual Tilt & Telescopic	Manual Tilt & Telescopic	Manual Tilt & Telescopic
Steering Switches	Standard Audio, Telephone, Info Display	Standard Audio, Telephone, Info Display	Standard Audio, Telephone, Info Display	Standard Audio, Telephone, Info Display	Standard Audio, Telephone, Info Display	Standard Audio, Telephone, Info Display
Sun Visor	Standard Ticket Holder Driver, Passenger Mirror with Cover	Standard Ticket Holder Driver, Passenger Mirror with Cover	Standard Ticket Holder Driver, Passenger Mirror with Cover	Standard Ticket Holder Driver, Passenger Mirror with Cover	Standard Ticket Holder Driver, Passenger Mirror with Cover	Standard Ticket Holder Driver, Passenger Mirror with Cover
USB	•	•	•	•	•	•
Android Auto & Apple CarPlay	•	•	•	•	•	•
Toyota Connect Enabled	•	•	•	•	•	•
Safety and Security						
Anti-Theft System	Immobiliser Alarm / Intrusion Sensor / Glass Break Sensor	Immobiliser Alarm / Intrusion Sensor / Glass Break Sensor	Immobiliser Alarm / Intrusion Sensor / Glass Break Sensor	Horn Alarm / Immobiliser / Intrusion Sensor / Glass Break Sensor	Immobiliser Alarm / Intrusion Sensor / Glass Break Sensor	Horn Alarm / Immobiliser / Intrusion Sensor / Glass Break Sensor
Auto Door Lock	Standard Speed Dependent	Standard Speed Dependent	Standard Speed Dependent	Standard Speed Dependent	Standard Speed Dependent	Standard Speed Dependent
Child Lock	•	•	•	•	•	•
Child Restraint System (ISOFIX)	Standard 2	Standard 2	Standard 2	Standard 2	Standard 2	Standard 2
Emergency Brake Signal	•	•	•	•	•	•
Parking Brake	Lever	Lever	Lever	Lever	Lever	Lever
Front Seat Belts	ELR, Pretensioner, Force Limiter	ELR, Pretensioner, Force Limiter	ELR, Pretensioner, Force Limiter	ELR, Pretensioner, Force Limiter	ELR, Pretensioner, Force Limiter	ELR, Pretensioner, Force Limiter
Power Door Lock	Standard, Auto Door Lock	Standard, Auto Door Lock	Standard, Auto Door Lock	Standard, Auto Door Lock	Standard, Auto Door Lock	Standard, Auto Door Lock
Pre-Crash System (Brake Synchronised)						
Rear Seat Belts	Standard ELR	Standard ELR	Standard ELR	Standard ELR	Standard ELR	Standard ELR
Seat Belt Warning	Front + Rear	Front + Rear	Front + Rear	Front + Rear	Front + Rear	Front + Rear

	2.8 GD-6 4X4 6AT 48V	2.8 GD-6 RB VX 6AT	2.8 GD-6 RB VX 6AT 48V	2.8 GD-6 4x4 VX 6AT	2.8 GD-6 4x4 VX 6AT 48V	2.8 GD-6 4x4 GR-S 6AT
Interior, Comfort and Convenience						
Bluetooth	•	•	•	•	•	•
Front Seat Adjustment	Driver & Passenger Power	Driver & Passenger Power	Driver & Passenger Power	Driver & Passenger Power	Driver & Passenger Power	Driver & Passenger Power
Front Seat Reclining	Driver & Passenger Power	Driver & Passenger Power	Driver & Passenger Power	Driver & Passenger Power	Driver & Passenger Power	Driver & Passenger Power
Front Seat Vertical Adjuster	Driver + Passenger Power	Driver + Passenger Power	Driver + Passenger Power	Driver + Passenger Power	Driver + Passenger Power	Driver + Passenger Power
Light Remind Warning	•	•	•	•	•	•
Heater	Auto Dual	Auto Dual	Auto Dual	Auto Dual	Auto Dual	Auto Dual
Multi-Information Display	Standard TFT	Standard TFT	Standard TFT	Standard TFT	Standard TFT	Standard TFT
Power Socket	Boot - 12V / Rear - 220V / Rear USB charging x2	Front - 12V / Boot - 12V / Rear - 220V / Rear USB charging x2	Front - 12V / Boot - 12V / Rear - 220V / Rear USB charging x2	Front - 12V / Boot - 12V / Rear - 220V / Rear USB charging x2	Boot - 12V / Rear - 220V / Rear USB charging x2	Front - 12V / Boot - 12V / Rear - 220V / Rear USB charging x2
Power Steering	Hydraulic / Variable / Flow / Control	Hydraulic / Variable / Flow / Control	Hydraulic / Variable / Flow / Control	Hydraulic / Variable / Flow / Control	Hydraulic / Variable / Flow / Control	Hydraulic / Variable / Flow / Control
Electric Windows	All All One Touch	All All One Touch	All All One Touch	All All One Touch	All All One Touch	All All One Touch
Rear Airconditioner	Auto	Auto	Auto	Auto	Auto	Auto
Rear Armrest	Standard 2 Cupholders	Standard 2 Cupholders	Standard 2 Cupholders	Standard 2 Cupholders	Standard 2 Cupholders	Standard 2 Cupholders
Seat Heater		Standard Driver and Passenger only	Standard Driver and Passenger only	Standard Driver and Passenger only	Standard Driver and Passenger only	
Speakers	Standard 6	Standard 11	Standard 11	Standard 11	Standard 11	Standard 11
Steering Column Adjustments	Manual Tilt & Telescopic	Manual Tilt & Telescopic	Manual Tilt & Telescopic	Manual Tilt & Telescopic	Manual Tilt & Telescopic	Manual Tilt & Telescopic
Steering Switches	Standard Audio, Telephone, Info Display	Standard Audio, Telephone, Info Display, Lane Departure Alert, Adaptive Cruise Control	Standard Audio, Telephone, Info Display, Lane Departure Alert, Adaptive Cruise Control	Standard Audio, Telephone, Info Display, Lane Departure Alert, Adaptive Cruise Control	Standard Audio, Telephone, Info Display, Lane Departure Alert, Adaptive Cruise Control	Standard Audio, Telephone, Info Display, Lane Departure Alert, Adaptive Cruise Control
Sun Visor	Standard Ticket Holder Driver, Passenger Mirror with Cover	Standard Ticket Holder Driver, Passenger Mirror with Cover	Standard Ticket Holder Driver, Passenger Mirror with Cover	Standard Ticket Holder Driver, Passenger Mirror with Cover	Standard Ticket Holder Driver, Passenger Mirror with Cover	Standard Ticket Holder Driver, Passenger Mirror with Cover
USB	•	•	•	•	•	•
Android Auto & Apple CarPlay	•	•	•	•	•	•
Toyota Connect Enabled	•	•	•	•	•	•
Safety and Security						
Anti-Theft System	Immobiliser Alarm / Intrusion Sensor / Glass Break Sensor	Horn Alarm / Immobiliser / Intrusion Sensor / Glass Break Sensor	Immobiliser Alarm / Intrusion Sensor / Glass Break Sensor	Horn Alarm / Immobiliser / Intrusion Sensor / Glass Break Sensor	Immobiliser Alarm / Intrusion Sensor / Glass Break Sensor	Horn Alarm / Immobiliser / Intrusion Sensor / Glass Break Sensor
Auto Door Lock	Standard Speed Dependent	Standard Speed Dependent	Standard Speed Dependent	Standard Speed Dependent	Standard Speed Dependent	Standard Speed Dependent
Child Lock	•	•	•	•	•	•
Child Restraint System (ISOFIX)	Standard 2	Standard 2	Standard 2	Standard 2	Standard 2	Standard 2
Emergency Brake Signal	•	•	•	•	•	•
Parking Brake	Lever	Lever	Lever	Lever	Lever	Lever
Front Seat Belts	ELR, Pretensioner, Force Limiter	ELR, Pretensioner, Force Limiter	ELR, Pretensioner, Force Limiter	ELR, Pretensioner, Force Limiter	ELR, Pretensioner, Force Limiter	ELR, Pretensioner, Force Limiter
Power Door Lock	Standard, Auto Door Lock	Standard, Auto Door Lock	Standard, Auto Door Lock	Standard, Auto Door Lock	Standard, Auto Door Lock	Standard, Auto Door Lock
Pre-Crash System (Brake Synchronised)		•	•	•	•	•
Rear Seat Belts	Standard ELR	Standard ELR	Standard ELR	Standard ELR	Standard ELR	Standard ELR
Seat Belt Warning	Front + Rear	Front + Rear	Front + Rear	Front + Rear	Front + Rear	Front + Rear

Issued on: 2026/10/28

SPECIFICATIONS

	2.4 GD-6 RB 6MT	2.4 GD-6 RB 6AT	2.4 GD-6 4X4 6AT	2.8 GD-6 RB 6AT	2.8 GD-6 RB 6AT 48V	2.8 GD-6 4X4 6AT
Safety and Security						
Wireless Door Lock	Standard Smart Entry	Standard Smart Entry	Standard Smart Entry	Standard Smart Entry	Standard Smart Entry	Standard Smart Entry
Airbags	Side, Curtain, Driver, Passenger, Driver Knee	Side, Curtain, Driver, Passenger, Driver Knee	Side, Curtain, Driver, Passenger, Driver Knee	Side, Curtain, Driver, Passenger, Driver Knee	Side, Curtain, Driver, Passenger, Driver Knee	Side, Curtain, Driver, Passenger, Driver Knee
Toyota Safety Sense						
Driver Support Systems						
Park Distance Control	Standard Front + Rear	Standard Front + Rear	Standard Front + Rear	Standard Front + Rear	Standard Front + Rear	Standard Front + Rear
Anti-Lock Braking System (ABS)	•	•	•	•	•	•
Blind Spot Monitor (BSM)						
Brake Assist (BA)	•	•	•	•	•	•
Electronic Brake Force Distribution (EBD)	•	•	•	•	•	•
Hill Assist Control (HAC)	•	•	•	•	•	•
Multi-Terrain Select (MTS)						
Traction Control (TRC)	Standard,	Standard,	Standard,	Standard,	Standard,	Standard, , Active Traction Control (ATRC)
Vehicle Stability Control (VSC)	•	•	•	•	•	•
Drive Mode Select	Standard Eco / Sport	Standard Eco / Sport	Standard Eco / Sport	Standard Eco / Sport	Standard Eco / Sport	Standard Eco / Sport
Trailer Sway Control (TSC)	•	•	•	•	•	•
Downhill Assist Control (DAC)						•
Lane Keeping System						
Limited Slip Differential	•	•	•	•	•	•
Service and Warranty						
Service Plan	9 Services / 90, 000km	9 Services / 90, 000km	9 Services / 90, 000km	9 Services / 90, 000km	9 Services / 90, 000km	9 Services / 90, 000km
Service Interval	12 months / 10, 000km	12 months / 10, 000km	12 months / 10, 000km	12 months / 10, 000km	12 months / 10, 000km	12 months / 10, 000km
Warranty	3 years / 100, 000km	3 years / 100, 000km	3 years / 100, 000km	3 years / 100, 000km	3 years / 100, 000km	3 years / 100, 000km
Dimensions and Capacities						
Front Overhang (mm)	990	990	990	990	990	990
Front Tread (mm)	1545	1545	1545	1545	1545	1545
Fuel Tank Size (L)	80	80	80	80	80	80
Gross Combination Mass (GCM)	5105	5105	5750	5110	5110	5750
Ground Clearance (mm)	279	279	279	279	279	279
Gross Vehicle Mass (GVM)	2605	2605	2705	2610	2610	2735
Height (mm)	1835	1835	1835	1835	1835	1835
Length (mm)	4795	4795	4795	4795	4795	4795
Rear Overhang (mm)	1060	1060	1060	1060	1060	1060
Rear Tread (mm)	1555	1555	1555	1555	1555	1555
Towing Capacity - Unbraked (kg)	750	750	750	750	750	750

	2.8 GD-6 4X4 6AT 48V	2.8 GD-6 RB VX 6AT	2.8 GD-6 RB VX 6AT 48V	2.8 GD-6 4x4 VX 6AT	2.8 GD-6 4x4 VX 6AT 48V	2.8 GD-6 4x4 GR-S 6AT
Safety and Security						
Wireless Door Lock	Standard Smart Entry	Standard Smart Entry	Standard Smart Entry	Standard Smart Entry	Standard Smart Entry	Standard Smart Entry
Airbags	Side, Curtain, Driver, Passenger, Driver Knee	Side, Curtain, Driver, Passenger, Driver Knee	Side, Curtain, Driver, Passenger, Driver Knee	Side, Curtain, Driver, Passenger, Driver Knee	Side, Curtain, Driver, Passenger, Driver Knee	Side, Curtain, Driver, Passenger, Driver Knee
Toyota Safety Sense		•	•	•	•	•
Driver Support Systems						
Park Distance Control	Standard Front + Rear	Standard Front + Rear	Standard Front + Rear	Standard Front + Rear	Standard Front + Rear	Standard Front + Rear
Anti-Lock Braking System (ABS)	•	•	•	•	•	•
Blind Spot Monitor (BSM)		Standard With Rear Cross Traffic Alert	Standard With Rear Cross Traffic Alert	Standard With Rear Cross Traffic Alert	Standard With Rear Cross Traffic Alert	Standard With Rear Cross Traffic Alert
Brake Assist (BA)	•	•	•	•	•	•
Electronic Brake Force Distribution (EBD)	•	•	•	•	•	•
Hill Assist Control (HAC)	•	•	•	•	•	•
Multi-Terrain Select (MTS)	•				•	
Traction Control (TRC)	Standard, , Active Traction Control (ATRC)	Standard,	Standard,	Standard, , Active Traction Control (ATRC)	Standard, , Active Traction Control (ATRC)	Standard, , Active Traction Control (ATRC)
Vehicle Stability Control (VSC)	•	•	•	•	•	•
Drive Mode Select	Standard Eco / Sport	Standard Eco / Sport	Standard Eco / Sport	Standard Eco / Sport	Standard Eco / Sport	Standard Eco / Sport
Trailer Sway Control (TSC)	•	•	•	•	•	•
Downhill Assist Control (DAC)	•			•	•	•
Lane Keeping System		Standard Lane Departure Alert	Standard Lane Departure Alert	Standard Lane Departure Alert	Standard Lane Departure Alert	Standard Lane Departure Alert
Limited Slip Differential	•	•	•	•	•	•
Service and Warranty						
Service Plan	9 Services / 90, 000km	9 Services / 90, 000km	9 Services / 90, 000km	9 Services / 90, 000km	9 Services / 90, 000km	9 Services / 90, 000km
Service Interval	12 months / 10, 000km	12 months / 10, 000km	12 months / 10, 000km	12 months / 10, 000km	12 months / 10, 000km	12 months / 10, 000km
Warranty	3 years / 100, 000km	3 years / 100, 000km	3 years / 100, 000km	3 years / 100, 000km	3 years / 100, 000km	3 years / 100, 000km
Dimensions and Capacities						
Front Overhang (mm)	990	990	990	990	990	990
Front Tread (mm)	1545	1545	1545	1545	1545	1545
Fuel Tank Size (L)	80	80	80	80	80	80
Gross Combination Mass (GCM)	5750	5110	5110	5750	5750	5750
Ground Clearance (mm)	279	279	279	279	279	279
Gross Vehicle Mass (GVM)	2735	2610	2610	2735	2735	2735
Height (mm)	1835	1835	1835	1835	1835	1835
Length (mm)	4795	4795	4795	4795	4795	4795
Rear Overhang (mm)	1060	1060	1060	1060	1060	1060
Rear Tread (mm)	1555	1555	1555	1555	1555	1555
Towing Capacity - Unbraked (kg)	750	750	750	750	750	750

Issued on: 2026/10/28

SPECIFICATIONS

	2.4 GD-6 RB 6MT	2.4 GD-6 RB 6AT	2.4 GD-6 4X4 6AT	2.8 GD-6 RB 6AT	2.8 GD-6 RB 6AT 48V	2.8 GD-6 4X4 6AT
Dimensions and Capacities						
Towing Capacity - Braked (kg)	2500	2500	3300	2500	2500	3300
Turning circle (tyres, m)	5.8	5.8	5.8	5.8	5.8	5.8
Wheelbase (mm)	2745	2745	2745	2745	2745	2745
Width (mm)	1855	1855	1855	1855	1855	1855
Top Speed (km/h)	175	170	170	175	175	180

	2.8 GD-6 4X4 6AT 48V	2.8 GD-6 RB VX 6AT	2.8 GD-6 RB VX 6AT 48V	2.8 GD-6 4x4 VX 6AT	2.8 GD-6 4x4 VX 6AT 48V	2.8 GD-6 4x4 GR-S 6AT
Dimensions and Capacities						
Towing Capacity - Braked (kg)	3300	2500	2500	3300	3300	3300
Turning circle (tyres, m)	5.8	5.8	5.8	5.8	5.8	5.8
Wheelbase (mm)	2745	2745	2745	2745	2745	2745
Width (mm)	1855	1855	1855	1855	1855	1855
Top Speed (km/h)	180	175	175	180	180	180

Issued on: 2026/10/28

SPECIFICATIONS

LINE DRAWING

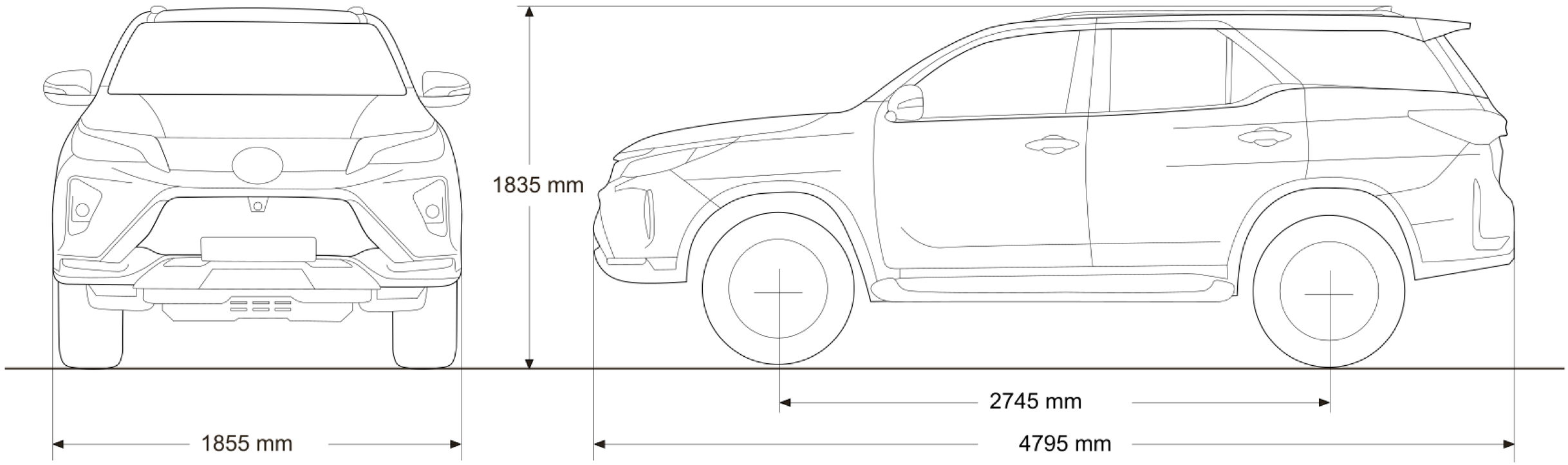

SPECIFICATIONS

EXTERIOR COLOURS

FOR ILLUSTRATIVE PURPOSES ONLY.

MONOTONE

040 - Glacier White

089 - Platinum White Pearl

1D6 - Chromium Silver

6X1 - Oxide Bronze

218 - Attitude Black

Disclaimer:

The information contained within or made available on any Toyota platform or note including but not limited to, this website/brochure/specification sheet, is provided for information purposes only. While we make reasonable efforts to update the information on our platform/s, Toyota Motor Corporation of Japan, and Toyota South Africa Motors (Pty) Ltd makes no representations, warranties, or guarantees, whether express or implied, that the content is accurate, complete or up to date, and all information contained herein is subject to change without notice.

Vehicle specifications may vary depending on the model, trim level, and market. Colours depicted on print and web material may not match the actual vehicle colour. Fuel consumption figures are estimates based on standardised testing conditions and actual results may vary due to (but not limited to) driving style, vehicle loading, tyres, wind, traffic, and accessories. All dimensions, capacities, and performance figures are approximate. Some features/options may be optional or only available on certain models/trim levels. Images and illustrations are for illustrative purposes only and may not reflect the actual vehicle.

Your use of, or reliance on, any information or contents herein is entirely at your own risk. Toyota Motor Corporation of Japan and Toyota South Africa Motors (Pty) Ltd (including its owners, agents, consultants, employees, and any affiliated person(s)) are not responsible for any loss or damages related to your use of, reliance on, or understanding of any information or contents on this or any other Toyota platform. This includes, without limitation, any direct, indirect, special, incidental, consequential, or punitive damages in terms of any contract, delict (breach of a duty of care) or law.

Furthermore, Toyota Motor Corporation of Japan and Toyota South Africa Motors (Pty) Ltd do not guarantee the uninterrupted or error-free operation of any platform or the availability of content, and are not liable for any interruptions, errors, or damages caused by any technical issues or limitations of these platforms, including but not limited to, server downtime, software malfunctions, or internet connectivity issues.

Issued on: 2026/10/28

FORTUNER